SK Advantage Series Long Stem Globe Valve Ordering Information

Part Number	Size (Inches)	Size dn	Connection	A (Inches)	A (mm)	B (Inches)	B (mm)	C (Inches)	C (mm)	Cv	Kv	Weight lbs	Weight kg
SKL9402SW	¼"	8	Socket Weld	14.6	370	2.7	68	4	102	1.7	1.47	3.76	1.70
SKL9404SW	½"	15								5	4.30	3.47	1.68
SKL9406SW	¾"	20				3.6	92			9.4	8.10	5.17	2.34
SKL9408SW	1"	25								14	12.10	5.34	2.42
SKL9412SW	1½"	40				4.7	121	5	127	28.3	21.6	9.48	4.30
SKL9416SW	2"	50		13.6	345	5.7	146			53	45.8	16.3	7.39
SKL9402BW	¼"	8	Butt Weld	14.6	370	2.7	68	4	102	1.7	1.47	3.76	1.70
SKL9404BW	½"	15								5	4.30	3.47	1.68
SKL9406BW	¾"	20				3.6	92			9.4	8.10	5.17	2.34
SKL9408BW	1"	25								14	12.10	5.34	2.42
SKL9412BW	1½"	40				4.7	121	5	127	28.3	21.60	9.48	4.30
SKL9416BW	2"	50		13.6	345	5.7	146			53	45.80	16.3	7.39

SK Advantage Series Medium Stem Globe Valve Ordering Information

Part Number	Size (Inches)	Size dn	Connection	A (Inches)	A (mm)	B Inches)	B (mm)	C (Inches)	C (mm)	Cv	Kv	Weight lbs	Weight kg
SKM9402SW	¼"	8	Socket Weld	10.6	270	2.7	68	4	102	1.7	1.47	3.31	1.50
SKM9404SW	½"	15								5	4.30	3.29	1.48
SKM9406SW	¾"	20				3.6	92			9.4	8.10	4.86	2.20
SKM9408SW	1"	25								14	12.10	5.02	2.27
SKM9412SW	1½"	40				4.7	121	5	127	28.3	21.60	8.92	4.04
SKM9416SW	2"	50		10.6	269	5.7	146			53	45.80	15.30	6.94
SKM9402BW	¼"	8	Butt Weld	10.6	270	2.7	68	4	102	1.7	1.47	3.31	1.50
SKM9404BW	½"	15								5	4.30	3.29	1.48
SKM9406BW	¾"	20				3.6	92			9.4	8.10	4.86	2.20
SKM9408BW	1"	25								14	12.10	5.02	2.27
SKM9412BW	1½"	40				4.7	121	5	127	28.3	21.60	8.92	4.04
SKM9416BW	2"	50		10.6	269	5.7	146			53	45.80	15.30	6.94

SK Advantage Series Short Stem Globe Valve Ordering Information

Part Number	Size Inches	Size dn	Connection	A (Inches)	A (mm)	B (Inches)	B (mm)	C (Inches)	C (mm)	Cv	Kv	Weight lbs	Weight kg
SKS9402SW	¼"	8	Socket Weld	6.7	170	2.7W	68	4	102	1.7	1.47	2.64	1.20
SKS9404SW	½"	15								5	4.30	2.62	1.19
SKS9406SW	¾"	20				3.6	92			9.4	8.10	4.21	1.91
SKS9408SW	1"	25								14	12.10	4.10	1.86
SKS9412SW	1½"	40		7.0	178	4.7	120	5	127	28.3	21.60	7.16	3.25
SKS9402BW	¼"	8	Butt Weld	6.7	170	2.7	68	4	102	1.7	1.47	2.64	1.20
SKS9404BW	½"	15								5	4.30	2.62	1.19
SKS9406BW	¾"	20				3.6	92			9.4	8.10	4.21	1.91
SKS9408BW	1"	25								14	12.10	4.10	1.86
SKS9412BW	1½"	40		7.0	178	4.7	120	5	127	28.3	21.60	7.16	3.25

USA: Headquarters

Elon, NC USA
Phone: +1 336 449 7707
Email: ecii@regoproducts.com

Europe

Gladenbach, Germany
Phone: +49 6462 9147 10
Email: info@rego-europe.de

Latin America

Santa Catarina, Mexico
Phone: +52 81 8032 5250
Email: volalde@regoproducts.com.mx

Asia

Shanghai, China, 200131
Phone: +86 21 5046 2183,
+86 21 5046 2012
Email: gary.cui@rego-asia.com

Eurasia

Moscow, Russia, 107023
49, Bolshaya
Semyenovskaya st.
Phone: +7(495) 988 6444
Email: mail@mvif.ru

REGO 10 YEAR WARRANTY

Quality materials, innovation and long-lasting design are built into every product we manufacture. That's how we can offer a 10-year product warranty—double that of other companies.

For technical assistance contact: support@regoproducts.com

regoproducts.com | rego-europe.de

RegO® is a registered trademark of Engineered Controls International, LLC
© 2018 ECI, LLC All rights reserved. Unauthorized use will be prosecuted.

SK-100

SK Advantage Series

Cryogenic Stainless Steel Globe Valves

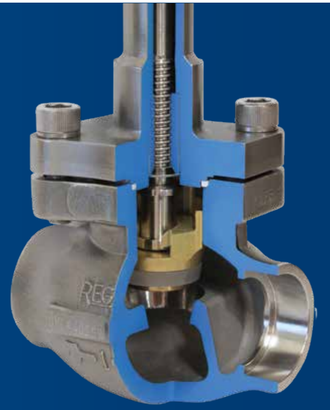

REGO 100% TESTED ★ REGO 10 YEAR WARRANTY

You don't thrive for more than 100 years because you're lucky.

It takes quality products, constant innovation, and above all, a dedication to the customer.

From a pioneer in the development of regulators to a global leader delivering a comprehensive line of flow control products, RegO® has always kept our customers' interests first.

Quality matters. Industrial gas applications have no room for leaks. That's why we design, manufacture, and test 100% of our products, and can offer a 10-year warranty. RegO products work better and last longer.

Innovative products, processes and people. We invest in technology and training to deliver flow control products designed to reduce maintenance and replacement costs, and ensure an efficient, safe work flow.

When our customers thrive, we do too. Our experienced team can provide technical support and product assistance. We're here to help in any way, every day.

Products built with innovation and backed by global support

More than 550 employees

8 global manufacturing facilities

Field support offices worldwide—we can be on site quickly when you need technical assistance.

RegO® SK Advantage Series cryogenic globe valves:

A better built valve, builds a better system.

Your customers depend on your equipment for safe, efficient and reliable cryogenic gas manufacturing, storage or delivery. To build a system that will meet these challenges, you need to start with quality components—products built for performance and built to last. Built from the industry-leading Goddard globe valve blueprint, the SK Advantage Series is packed full of RegO innovation to deliver years of low maintenance flow control.

LONG STEM | MEDIUM STEM | SHORT STEM | LONG STEM ANGLE | MEDIUM STEM ANGLE

Quality materials, innovation and long-lasting design

That's how we can offer a 10-year product warranty—double that of other companies.

REGO 100% TESTED ★

REGO 10 YEAR WARRANTY

TÜV SÜD

PED & TPED CERTIFIED

Patented Ergonomic handwheel

Easy-to-turn ergonomic handwheel, for faster open/close

Requires less torque than other styles, increases safety and reduces repetitive motion stress

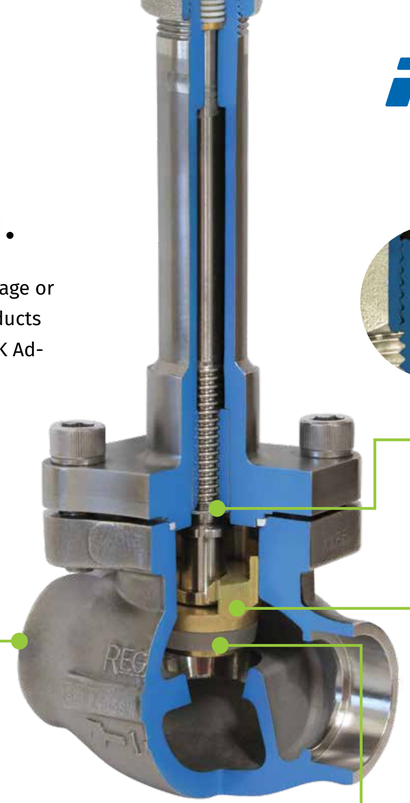

Weld-in-place

No disassembly required to install into a system

Simply follow proper installation and welding procedures

Available in socket and butt weld configurations

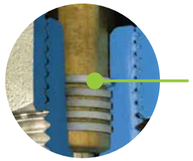

Less adjustment & maintenance

RegO Kold-Seal™ technology

Live loaded PTFE stem packing seals tighter to reduce loss

Up to 16% lighter than the competition

Robust, stainless steel design

Longer life, less maintenance, and safe, no waste operation

Innovative bonnet pressure release system

Instead of wasteful weep holes, the SK Advantage Series captures excess pressure in the Kold-Seal protected valve stem on open and then returns it to the system upon close.

Up to 39% greater Cv

RegO conical seat for faster fills and secure shutoff

Opens wider for exception flow rates

More contact area between the seat and the seal for a tighter seal than other technologies

Less chance of debris accumulation for less frequent service

Up to 15x more durable in heavily used valves

Fast, easy maintenance with single seat assembly

PCTFE material for best cryogenic performance

No washers and nuts to retain the seat. Less adjustment and fast, easy maintenance.

Reduced risk of components vibrating loose that could affect downstream equipment

CRYOGENIC LIQUID & VAPOR SERVICE:

OXYGEN
NITROGEN
ARGON
CARBON DIOXIDE
NITROUS OXIDE
METHANE
ETHANE
ETHYLENE
KRYPTON
LNG

APPLICATIONS:

BULK STORAGE TANKS
MICRO BULK TANKS
TRANSPORT TRAILERS
PIPING

RegO® is a registered trademark of Engineered Controls International, LLC © 2018 RegO. All rights reserved. Unauthorized use will be prosecuted.